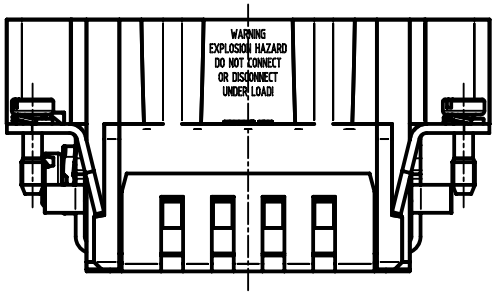

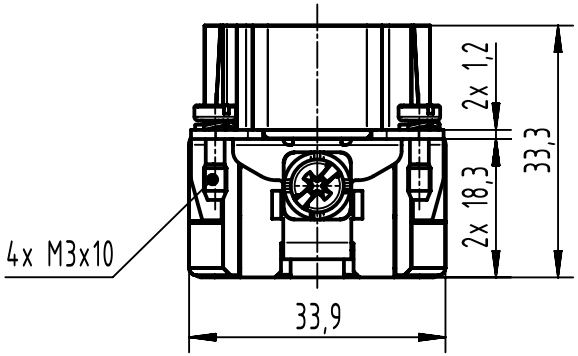

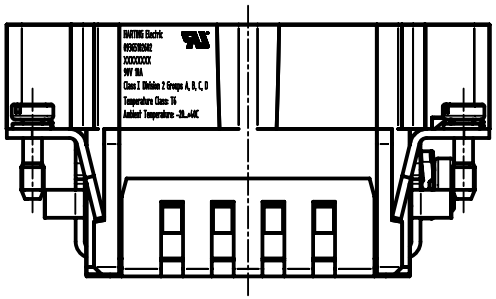

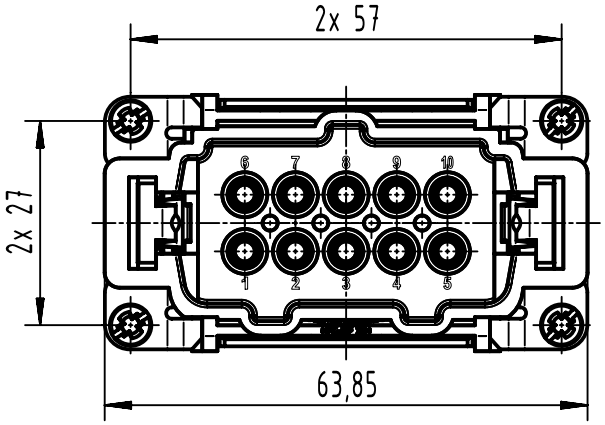

FOR USE WITH HAN 10E CRIMP: AWG 14, 16
FOR USE WITH Cable Type:
PLTC, PLTC-ER, ITC, ITC-ER, MC, MV, AND TC
FOR USE IN CLASS I, DIVISION 2 GROUPS A, B, C AND D
HAZARDOUS LOCATIONS OR UNCLASSIFIED LOCATIONS

THE INSTALLATION MUST BE IN ACCORDANCE WITH THE ASSOCIATED LOCATION RESTRICTIONS OF THE NATIONAL ELECTIRC CODE OR CANADIAN ELECTRICAL CODE AS APPLICABLE, INCLUDING ISSUES SUCH AS THE ROUTING, SUPPORT AND LENGTH OF THE INVOLVED CORD OR CABLE.

WARNING
EXPLOSION HAZARD
DO NOT CONNECT
OR DISCONNECT
UNDER LOAD!

panel cut out

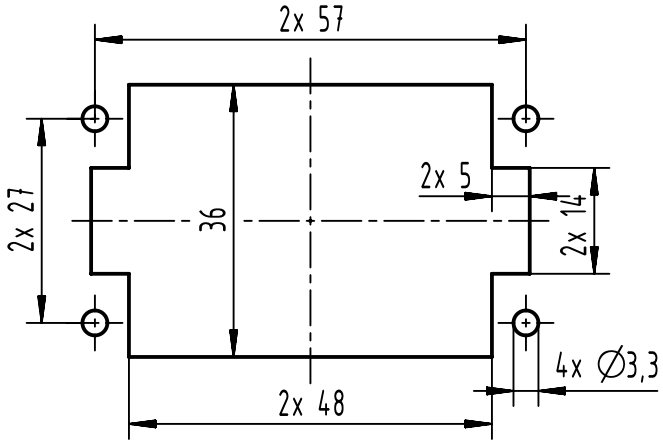

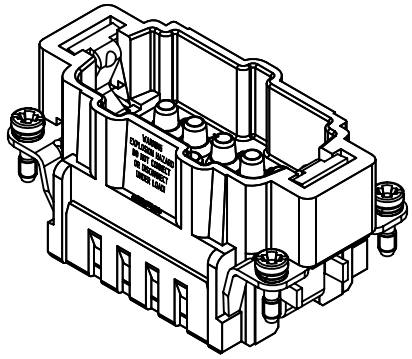

All Dimensions in mm Original Size DIN A4	Scale 1:1	Free size tol.		Ref. Sub.	
All rights reserved Department EL PD	Created by HELLMANN	Inspected by SCHNIEDER	Standardisation	Date 2023-01-24	State Final Release
HARTING D-32339 Espelkamp	Title Han 10Ex UL-M-c				Doc-Key / ECM-Nr. 100669652/UGD/001/F 500000235316
	Type TB	Number 09 36 510 2602		Rev. F	Page 1/1

A4