panel cut out

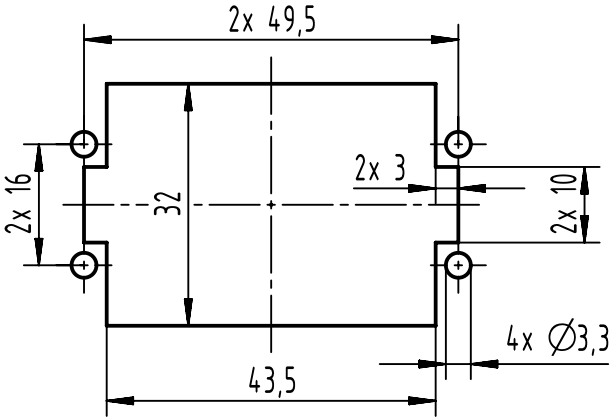

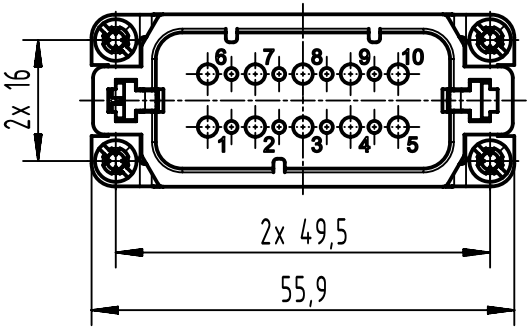

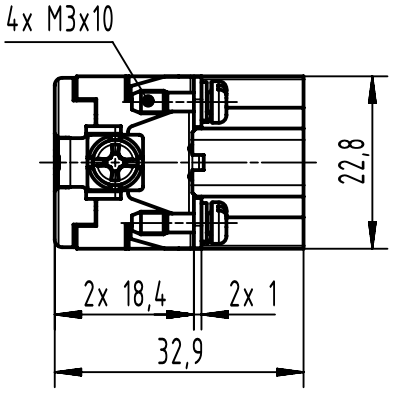

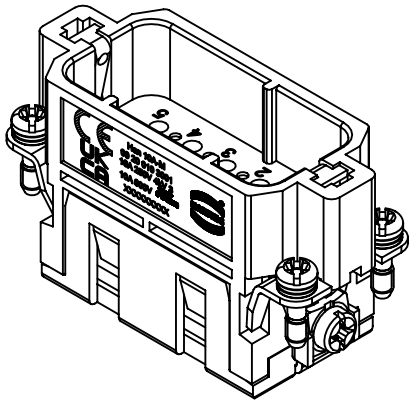

All Dimensions in mm Original Size DIN A4	Scale 1:1	Free size tol.		Ref. Sub.	
All rights reserved Department EL PD	Created by BALSAN	Inspected by 402602	Standardisation	Date 2022-12-05	State Final Release
	Title Han 10A-STI-C				Doc-Key / ECM-Nr. 100087375/UGD/007/E 500000231824
HARTING D-32339 Espelkamp	Type TB	Number 09 20 010 3001		Rev. E	Page 1/1

A4